CV-108/P1001

8.4" TFT SVGA 4:3 Panel PC with Resistive 5-wire Touch,
w/ Intel® Atom™ E3845 Quad Core, 4x USB, 2x COM, 1x VGA and 1x DisplayPort

Key Features

- 8.4" TFT SVGA 4:3 LCD with Resistive 5-wire Touch
- Designed with Aluminum Die-Casting Front Frame
- Onboard Intel® Atom™ E3845 Processor Quad Core, 1.91GHz
- 1x DDR3L SO-DIMM max. up to 8GB
- 1x 2.5" SATA HDD Bay, 1x CFast Card and 1x SIM Card Socket
- 2x LAN, 4x USB, 2x COM, 1x VGA, 1x DisplayPort, 4x DI/4x DO
- 1x Mini-PCIe Expansion Socket
- IP 65 Compliant Front Panel
- Support Panel / Wall / VESA Mounting
- Convertible Display System (CDS) Supported
- Built-in Two 2W Internal Speakers

Overview

The 8.4" all-in-one panel PC offers LED backlight LCD with resolution up to 800x600 (SVGA) and 400 nits brightness. CV-108/P1001 features flat surface and IP65 dust/waterproof front panel. In addition, designed with aluminum die-casting front frame with rugged body structure that can be able to apply in industrial applications. CV-108/P1001 supports Convertible Display System (CDS) technology which makes it more flexible in system maintaining and upgrading. CV-108/P1001 carries single touch function with resistive 5-wire touch screen. By incorporating with Intel® Atom™ E3845 processor and DDR3L memory, CV-108/P1001 offers extensive I/O including 4x USB, 2x RS232/422/485, 1x VGA, 1x DisplayPort and 4 DI / 4DO.

CV-108/P1001 supports 3G and WLAN via 2x GbE and 1x Mini-PCIe slot. Furthermore, they are 3 types of storage devices including 2.5" SATA HDD, CFast and SIM card. The accessible design of these storage devices allow quick data access and easy maintenance. Supporting wide range power DC input from 9 ~ 48VDC, CV-108/P1001 can be deployed and powered for various industrial applications.

Specifications

Display
- LCD Size: 8.4" (4:3)
- Max. Resolution: 800 x 600
- Brightness (cd/m2): 400
- Contrast Ratio: 600 : 1
- LCD Color: 262K
- Pixel Pitch (mm): 0.213 (H) x 0.213 (V)
- Viewing Angle (H-V): 150 / 130
- Backlight MTBF: 30000 hrs (LED Backlight)

Touch
- Resistive 5-wire

Processor System
- Onboard Intel® Atom™ Processor E3845 Quad Core, 1.91 GHz with AMI 64Mbit SPI BIOS

Memory
- 1x 204-Pin SO-DIMM DDR3L 1066 / 1333MHz (un-buffered and non-ECC), max. up to 8GB

Ethernet
- 2 x Intel® i210-AT GbE LAN Port, Support Wake-on-LAN and PXE

Storage
- 1x External 2.5" SATA HDD Bay
- 1x External CFast Socket
- 1x External SIM Card Socket

I/O Ports
- 1x VGA
- 1x DisplayPort
- 1x USB 3.0
- 3x USB 2.0
- 2x DB9 for COM1~2, Support RS232/422/485 with Auto Flow Control
- 1x Line-out
- 1x Mic-in
- 1x Power Switch
- 1x Reset Button
- 1x AT/ATX Switch

Digital Input & Output
- 4x Digital Input (Source Type)
  - Input Voltage (Dry Contact):
    - Logic 0: Close to GND
    - Logic 1: Open
  - Input Voltage:
    - Logic 0: 3V max.
    - Logic 1: 5V min. (DI to COM-)
- 4x Digital Output
  - Supply Voltage: 5~30VDC
  - Sink Current: 200 mA Max. Per Channel

Expansion
- 1x Full-size Mini PCIe Socket for Wi-Fi / GSM / Expansion Module

Other Features
- Watchdog Timer: Software Programmable Supports 1~255 sec. System Reset
- Audio: AMP 2W + 2W (Internal Speaker)
- OSD Function: LCD On/Off, Brightness Up/Down

Power
- Support AT, ATX Mode
- 1x 3-pin Terminal Block Connector with Power Input 9~48VDC
- 1x Optional AC/DC 12V/5A, 60W Power Adapter

Environment
- Operating Temperature: Ambient with air flow: -10°C to 60°C (with Industrial Grade Peripherals)
- Storage Temperature: -20°C to 75°C
- Relative Humidity: 10%~95% (non-condensing)
- IP Level: IP 65 Compliant Front Panel

Physical
- Dimension (WxDxH, mm): 262 x 186.2 x 65 mm
- Weight: 2.96 kg
- Construction Front Panel: Die-Casting Flat Surface
- Mounting: Panel / Wall / VESA Mounting

Operating System
- Windows® 8
- Windows® 7
- Windows® Embedded Standard 7

Certification
- CE
- FCC Class A

External I/O Mechanical Layout

Front I/O

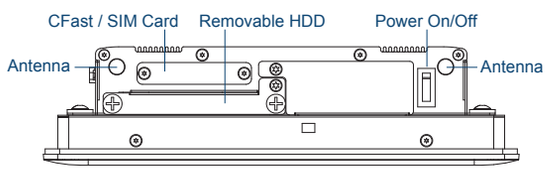

Rear I/O

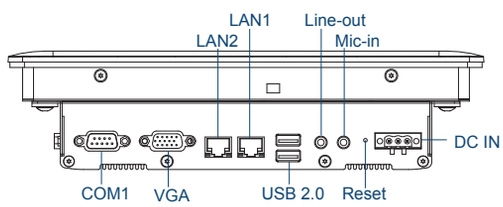

Left I/O

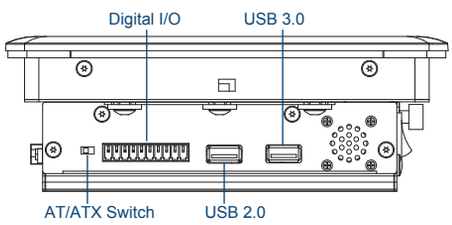

Right I/O

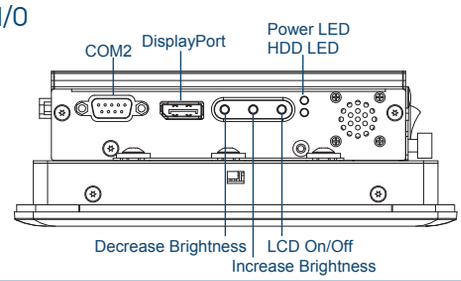

Dimensions

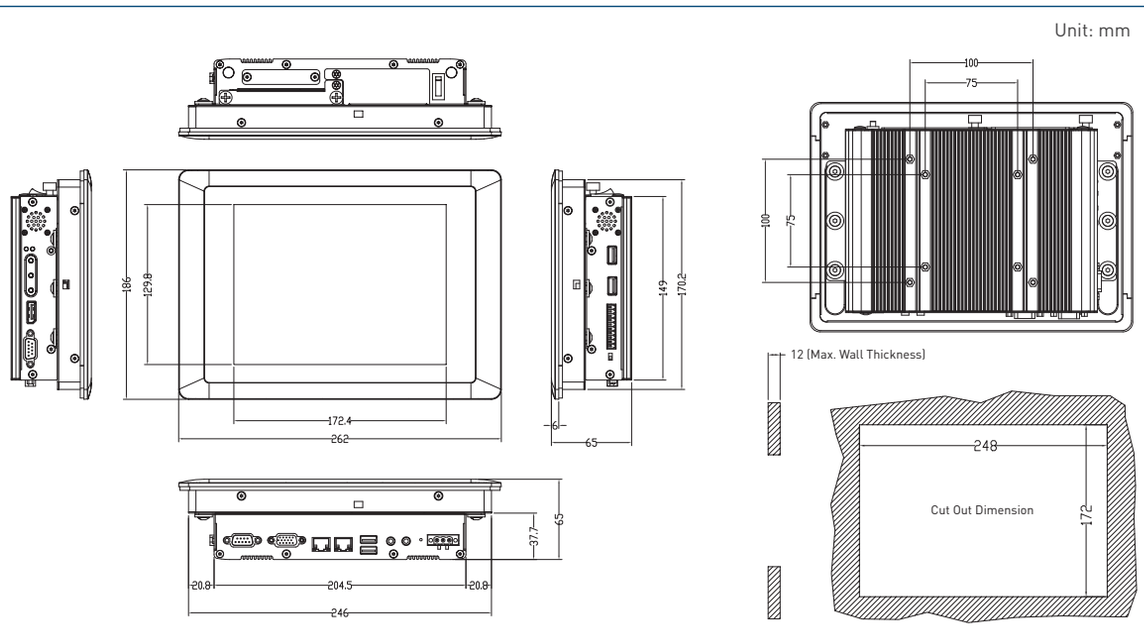

© Cincoze Co., Ltd. All Rights Reserved. Specifications subject to change without notice.

Ordering Information

Available Models

Model No.	Product Description
CV-108R/P1001	8.4" TFT SVGA 4:3 Panel PC with Resistive 5-wire Touch, w/ Intel® Atom™ E3845 Quad Core, 4x USB, 2x COM, 1x VGA and 1x DisplayPort

Package Checklist

CV-108/P1001

- CV-108/P1001 Panel PC x 1
- Panel Mounting Kit x 4
- Utility DVD Driver x 1
- DIO Terminal Block Connector (Female) x 1
- Power Terminal Block Connector (Female) x 1
- HDD Screw Pack x 1
- Mini PCIe Screw Pack x 1

Optional Accessories

Model No.	Description
GSM60A12-CIN	Adapter AC/DC 12V 5A 60W with 3pin Terminal Block Plug 5.0mm Pitch, GSM60A12-P1J
SL2-SL3	US 2 heads power cord, US B type to IEC C13, SVT 18AWG/3C Black 1.8M SL-2+SL-3
SL6-SL3	EU 2 heads power cord, EU G type to IEC C13, H05VV-F 0.75mm2/3G Black 1.8M SL-6+SL-3
QP026-SL3	UK 2 heads power cord, UK I type to IEC C13, H05VV-F 0.75mm2/3G Black 1.8M QP026+SL-3